ORDER DETAILS	
CLIENT NAME	/
INQUIRY NO.	INQUIRY_V1
ORDER NO.	
PRODUCT DETAILS	
SIZE	KING SLIM SIZE WITH TIPS+SHREDDER
PAPER TYPE	
QUANTITY	
BOX PACKING	16 BOOKLETS A BOX
VALUE ADDITION	
PRINTING EFFECT	CMYK

DIE CUT LINE
FOLD LINE
BLEED LINE

REMARKS:
- Artwork should be submitted in AI, EPS, PDF, CDR, PSD.
- For JPEG, PNG and PSD please submit your artwork with a minimum of 300dpi

Please see the text and graphic direction guideline below.

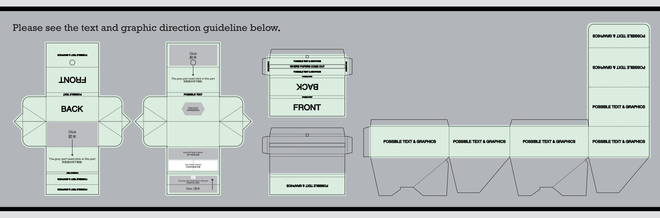

VISIBLE AREA

CONCEPTS
NICHE MANUFACTURING

COVER OUTSIDE

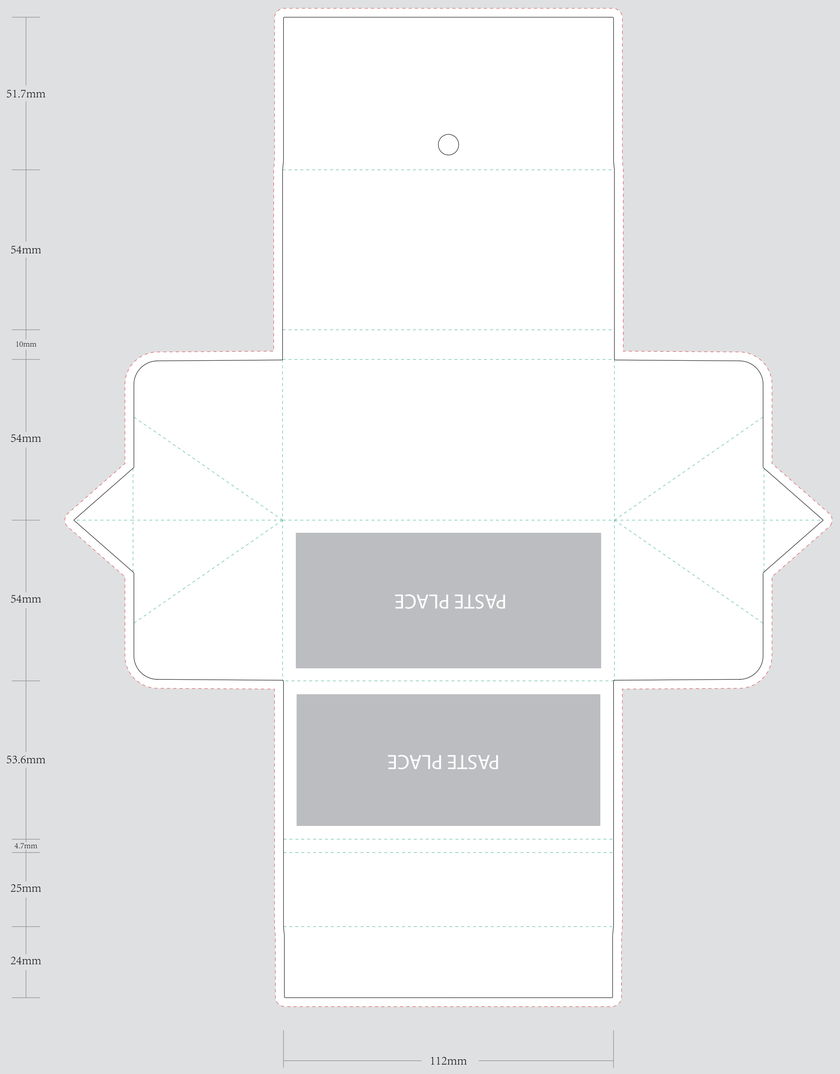

COVER INSIDE

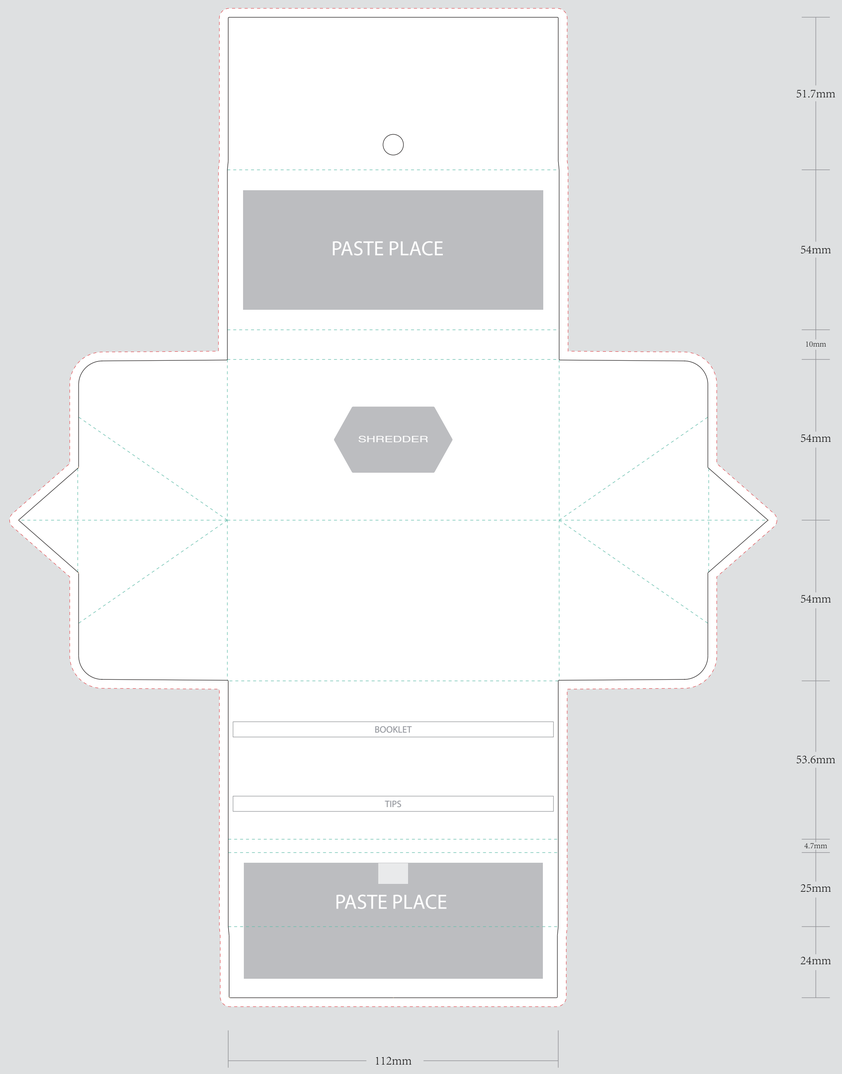

EXAMPLE

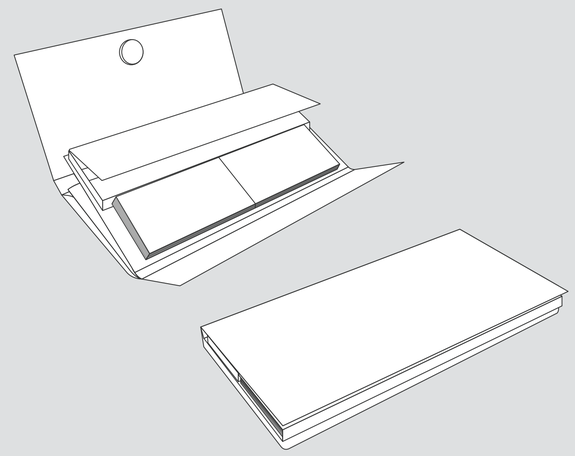

BOOKLET OUTSIDE

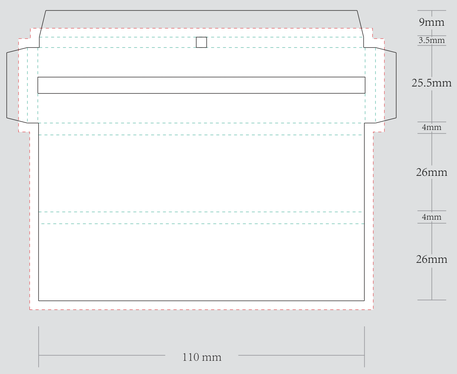

BOOKLET INSIDE

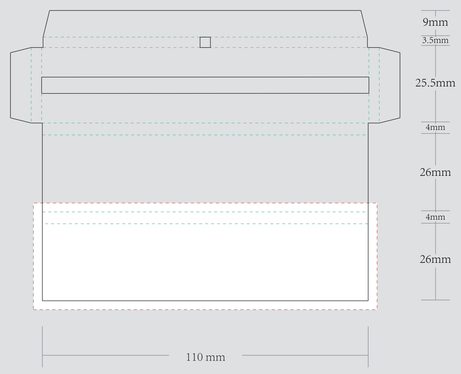
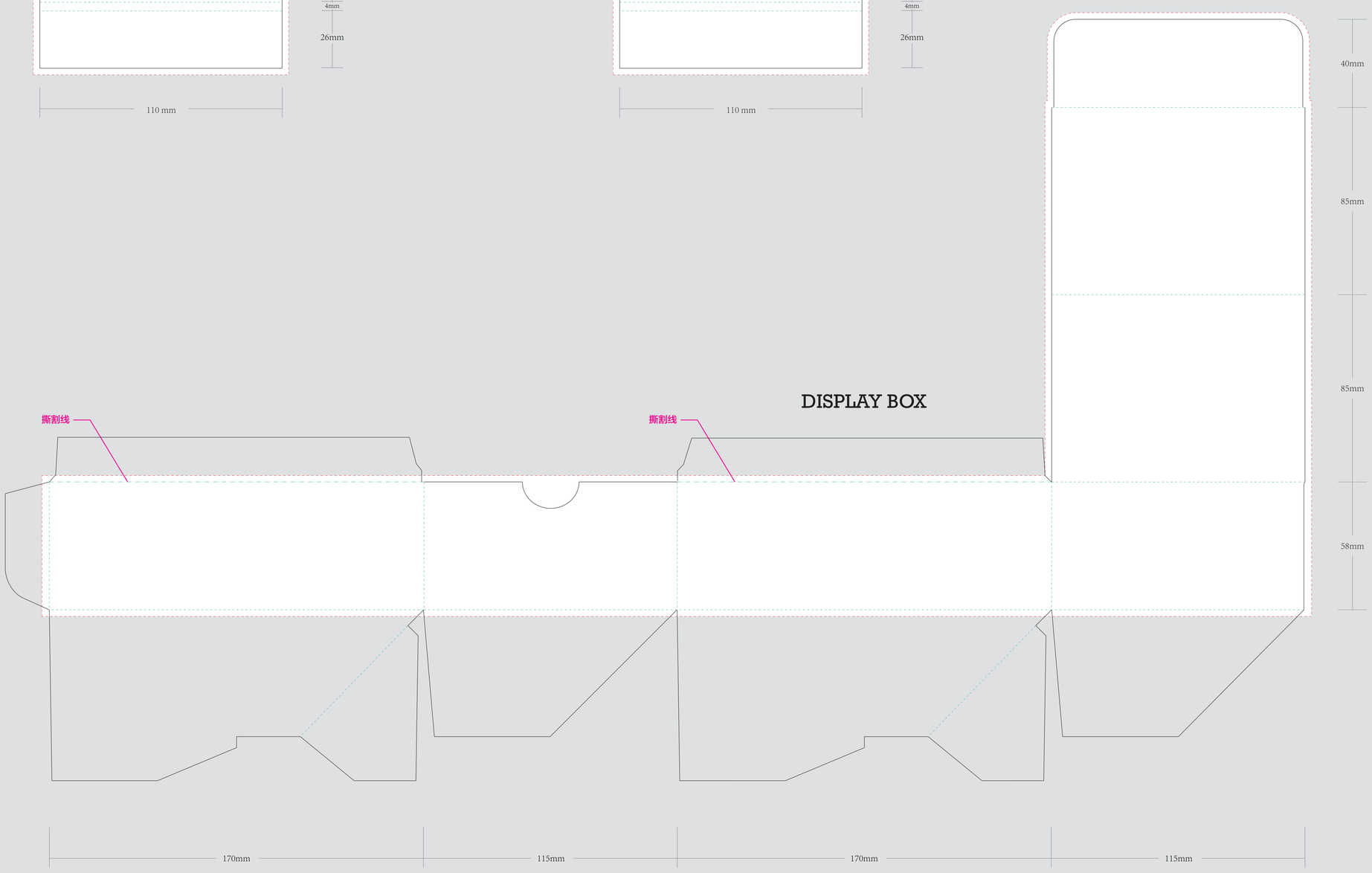
DISPLAY BOX